Dea Juno-Q2 XS

KARIZMA luce
· LED'S DELIGHT ·

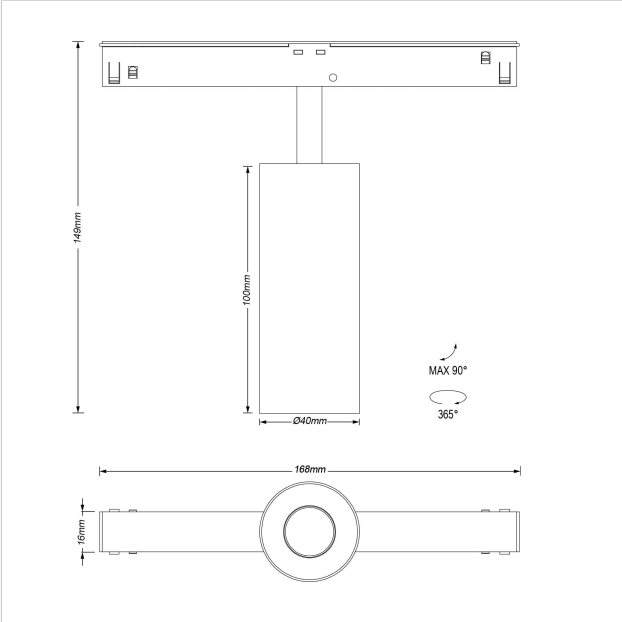

SKU	: Q621BB92734BGF0
Housing material	: Aluminum Die Cast
Luminaire Color	: Black
Optic	: Reflector
Reflector Color	: Black High Gloss
Power supply	: included 48V DC/DC converter ON/OFF
Luminaire dimension	: 134mmx40mm
Cut out dimension	: N/A
Luminous Flux (lm)	: 490 lm
LED power	: 6.2W
System power	: 7W
Beam angle (°)	: 34°
CCT (K)	: 2700K
CRI	: 90
Chromaticity tolerance	: 3 MacAdam
Mains Voltage	: 48V DC
El. Class	: Class III
Lifetime	: 50000h
IP rating	: IP20
Light source energy class	: F
Light source identifier	: CLU701-1002C4-273H5K2
Net. Weight	: 0,3 kg

Warranty	: 5Y

All rated values @ ambient temperature of 25° C. Electric and photometric values are initially subject to a tolerance of +/- 10%. Tolerance of color temperature +/- 150K. Technical data can change without prior notice.

©2022 Karizma Luce BV. All rights reserved. Please visit karizmaluce.com for more information.